Data Sheet

Article number: 54301616
Description: LDK Rod end PHS 16ECL
Threaded left

Measures

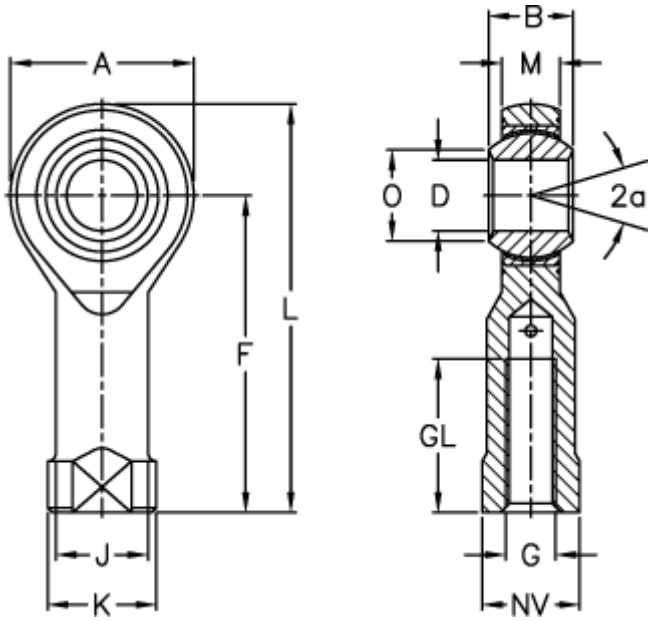

A	= 38	J	= 22.0
a (degrees)	= 15	K	= 27
B	= 21	L	= 83
D	= 16	M	= 15.00
Dynamic load C (kN)	= 19.8	NV	= 24
F	= 64	O	= 19.3
g	= M16	Static load C0 (kN)	= 39.7
GL	= 33	Weight (g)	= 210

Product drawings and brochures of any kind may contain errors for which Brd. Klee A/S cannot be liable.